Audi RS 5 Avant

Model year 2026

	RS 5
Model Code	FU5RRA
Maximum Retail Price[1]	**$196,990**

Technical Information

Powertrain

Engine configuration	V6
Engine displacement in cc	2,894
Gross / net battery capacity in kWh	25.9 / 22.0
Max. power output in kW	470
Max. torque in Nm	825
Transmission type	8-speed tiptronic
Drive type	quattro sport
Acceleration - 0-100 km/h in seconds	3.6
Top speed in km/h	250

Fuel & Emissions

Fuel type	Petrol / Electric
Fuel consumption l/100km [2,3]	TBC
CO2 emissions g/km [2,3]	TBC
Charging inlet type	Type 2 AC
Electrical consumption Wh/km [2,3]	TBC
WLTP electric range in km [2]	TBC
Max. Charging capacity AC / DC in kW	11 / -
Emissions standard	TBC

Capacities

Number of seating positions	5
Luggage capacity behind 2nd / 1st row in litres	361 / 1,302
Maximum towing weight, braked / un-braked 12% gradient in kg	1,900 / 750

Warranty

Audi warranty 5 years [4]	•
Audi roadside assist 5 years [4]	•
Motoring plan 3 years [4]	•

[1] Prices are maximum retail including 15% GST. Maximum Retail Price does not include additional on road costs.
[8] Limited stock available in dealership only.
[2] The official fuel consumption, emissions, and EV range figures determined by the WLTP test should be used as a guide only, or for vehicle to vehicle comparison. Actual results may vary due to factors such as driving or environmental conditions.
[3] The figures provided are converted using official NZ Government calculator to 3P-WLTP from official manufacturer's 4P WLTP or NEDC tests in accordance with EU legislation.
[4] or 150,000 km, whatever comes first

Dimensions

• Standard equipment | ○ Available as an option | - not available
All prices and specifications are subject to change without notice

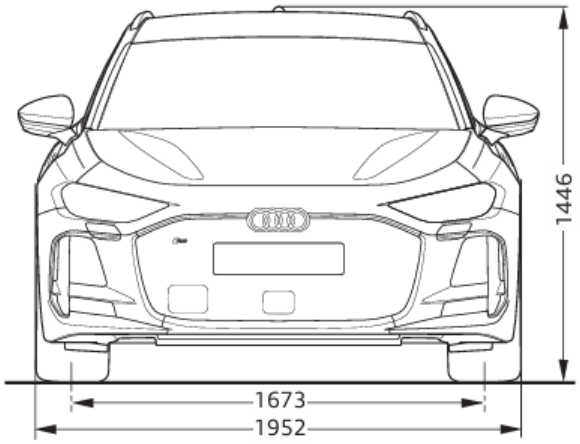

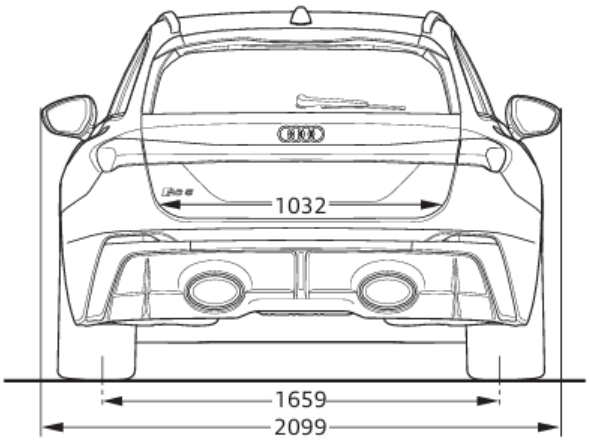

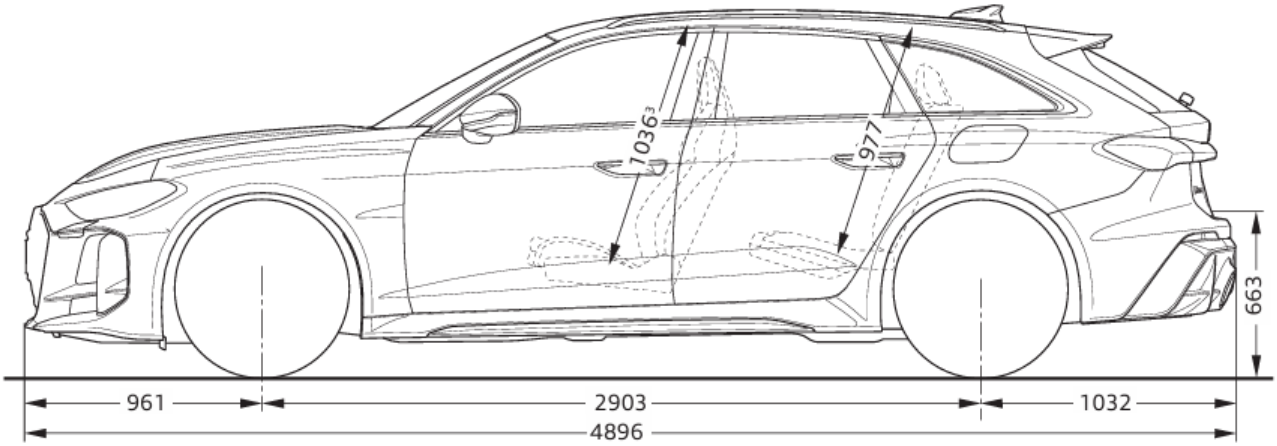

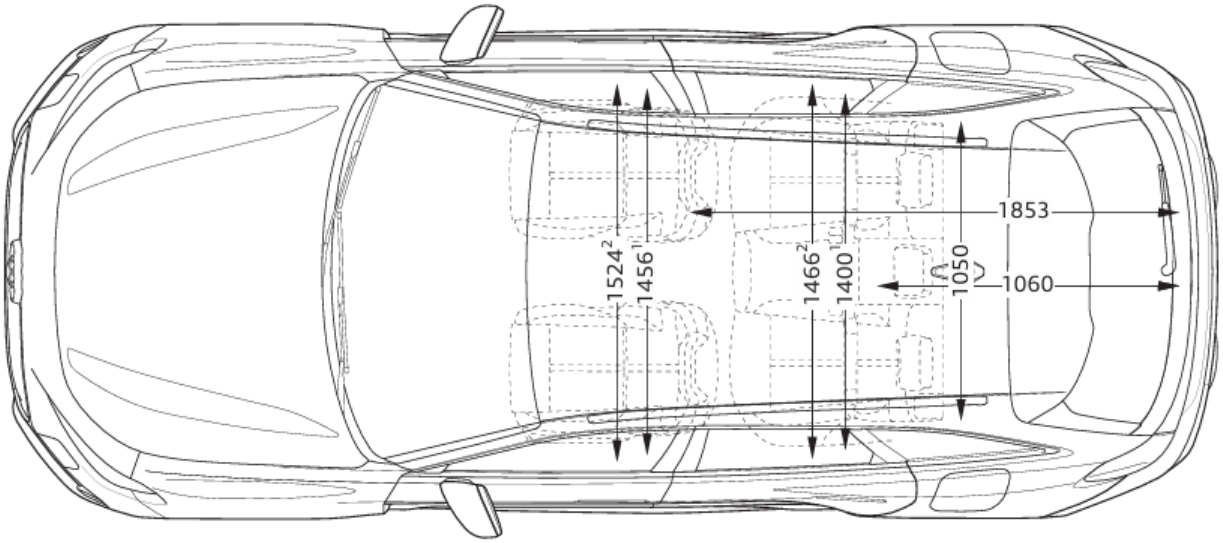

[1] Breite Schulterraum / Shoulder width
[2] Breite Ellbogenraum / Elbow width
[3] maximaler Kopfraum / Maximum headroom
Angaben in Millimeter / Dimensions in millimeters
Angabe der Abmessungen bei Fahrzeugleergewicht / Dimensions of vehicle unloaded
Bei den angegeben Werten handelt es sich um auf Datenbasis ermittelte Nominalwerte. Sie basieren auf zum Zeitpunkt der Ermittlung vorliegenden Datenständen und definierter Ausstattungsvariante.
The indicated values are data based nominal values. They refer to the present data sets at the date of the determination and a defined set of equipment

Standard Equipment

• Standard equipment | ○ Available as an option | - not available
All prices and specifications are subject to change without notice

Exterior

Sun protection glass, tinted	•
RS bumpers	•
Side and rear windows with heat-insulating glazing	•
RS sport exhaust system	•
Preparation for trailer hitch	•
Roof rails, black	•
Window trim strips and attachments, dark	•
RS roof edge spoiler	•
RS exterior features, gloss black	•
Exterior mirror housings in black	•
Door handles, black	•
Darkened matrix LED headlights with dynamic light sequencing and dynamic indicator	•
Digital OLED rear lights	•
Headlight cleaning system	•
Entry LED with RS projection, front and rear	•

Seats & Interior Trim

Leather combination, perforated with honeycomb pattern	•
Interior trims in vanadium look	•
Sport seats plus, front	•
Wraparound interior elements in Dinamica microfibre	•
RS door sill trims	•
Floor mats with RS logo	•
Sport contour steering wheel, 3-spoke, flat top and bottom, with multifunction, shift paddles and control satellites	•
Inlays, aluminium Rhombus, painted black	•
RS emblems with steering wheel rim in perforated leather and 12 o’clock marker in leather	•
Headlining in cloth, black	•
Upper and lower interior elements with contrasting stitching	•

Comfort & Convenience

Memory function for the driver seat and the exterior mirrors	•
Steering wheel heating	•
Convenience auxiliary air conditioning	•
Ambient lighting package pro	•
Steering wheel adjustment, electric	•
Digital key	•
Audi drive select	•
ISOFIX-compliant child seat mounting and top tether for the outer rear seats	•
Net partition	•
Front seats, electrically adjustable	•
Sunblind, manual for the door windows, rear	•
Seat heating, front and rear	•
Seat ventilation and massage function, front	•
Luggage compartment lid, electrically opening and closing	•
Convenience key with Safelock	•
Interior mirror, automatically dimming	•
Rear occupant detection	•
Comfort centre armrest, front	•
Exterior mirrors, electrically adjustable, heated and folding, automatically dimming on both sides	•

• Standard equipment | ○ Available as an option | - not available
All prices and specifications are subject to change without notice

Anti-theft alarm	•
Lumbar support, pneumatically adjustable with massage function for the front seats	•
3-zone deluxe automatic air conditioning	•

Driver Assistance Systems

Driver attention and fatigue monitor	•
Park assist pro with remote functionality	•
Adaptive cruise assist plus	•
Audi Sport external sound	•
Front cross-traffic assist	•
3D and 360° surround view cameras	•
Camera-based traffic sign recognition	•
Passenger presence detection	•
Swerve assist and turn assist	•
Lane departure warning with emergency assist	•
Front and rear emergency brake assist	•
Proactive occupant protection, front, side and rear	•
Side assist and exit warning, rear cross-traffic assist and rear turn assist	•

Infotainment

Audi connect navigation & infotainment [5]	•
Audi Application Store and smartphone interface	•
Audi connect emergency call [6] & service with Audi connect remote & control[5]	•
MMI front passenger display	•
Head-up display	•
USB interfaces with higher charging capacity	•
MMI navigation plus with MMI touch	•
Bang & Olufsen 3D Premium Sound System with head restraint loudspeakers	•
Audi virtual cockpit plus	•
Phone compartment with inductive charging function	•

[5] 3 year subscription included. [6] 10 year subscription included.

Wheels & Suspension

Wheels, 6-twin-spoke, matt platinum grey, 10.0|10.5Jx21, 285/30 R21 tyres		•
quattro with Dynamic Torque Control		•
RS sport suspension with controlled 2-valve damper		•
Tyre repair kit		•
RS steel brakes, with brake callipers in black		•
Tyre pressure monitoring system		•

Charging Equipment

e-tron charging system compact	•
Clip wall mount	•
Domestic connector type I for the e-tron charging system	•
Industrial connector CEE 32 A, 230 V, for the e-tron charging system	•
Charging cable, mode 3 for public charging (AC)	•

Optional Equipment

• Standard equipment | ○ Available as an option | - not available
All prices and specifications are subject to change without notice

Individual options

Individual options	Code	Price
Bedford green exterior paint * **Only in conjunction with the sport package (PEG)*	E8	$1,500
Ascari blue exterior paint	9W	$1,500
Dash cam	QK5	$1,000
Acoustic glazing for door windows, front	VW5	$1,000
Inlays, carbon micro twill, structure	5MK	$2,000
Inlays, linen mesh, light grey, Audi exclusive	7TN	$3,000
Inlays, matt carbon camouflage **Only in conjunction with the sport package (PEG)*	7TS	$2,000
Inlays, poplar sine natural, silver-brown, Audi exclusive	7TZ	$3,000
Exterior mirror housings in carbon	6FQ	$2,000
Roof edge spoiler in carbon	5J6	$4,500
RS steel brake system with brake callipers in red	PC2	$1,500
RS ceramic brake system with brake callipers in black	PC1	$22,000
RS ceramic brake system with brake callipers in red	PC3	$23,000
RS ceramic brake system with brake callipers, bronze-coloured* **Only in conjunction with the sport package (PEG)*	PC7	$23,000
Trailer hitch, mechanically swivelling	1D4	$4,000
Panoramic glass roof with switchable transparency	3FP	$5,000
Interior RS with sport seats plus in leather, black with red accents	PWY	$1,000
Interior RS with sport seats plus, in leather, diamond silver-mint grey, Audi exclusive* * Only in conjunction with inlays, 7TN, 7TS, or 7TZ	YDS	$19,000
Interior RS with sport seats plus, black/neodymium gold-bright orange, Audi exclusive* * Only in conjunction with Audi sport package (PEG)	YDR	$19,000

Package options

Package options	Code	Price
Carbon styling package	**PAK**	**$12,000**
Includes:		
> Front side blades, side sill inserts and rear diffuser insert in gloss carbon	5L4	○
Matt carbon camouflage styling package*	**PA7**	**$14,000**
Includes:		
> Front side blades, side sill inserts and rear diffuser insert in matt carbon camouflage	5l5	○
> Exterior mirror housings, matt carbon camouflage	6FN	○
** Only in conjunction with Audi sport package (PEG)*		
Audi Sport package	**PEG**	**$7,000**
Includes:		
> RS bumpers plus	VJ5	○
> Top speed increased up to 285 km/h	6Y4	○
Interior RS with sport seats plus in Dinamica microfibre/leather, deep black/black with green accents	**PWU**	**$5,000**
Includes:		
> Seats in dinamica microfibre/leather combination, deep black/black, perforated with honeycomb pattern	N5M	○
> RS emblems with steering wheel rim in Dinamica microfibre, deep black and black 12 o'clock marker in leather	6F8	○
> Upper interior elements with contrasting stitching and lower interior elements in Dinamica microfibre with contrasting stitching	7HC	○
** Only in conjunction with Audi sport package (PEG)*		

• Standard equipment | ○ Available as an option | - not available
All prices and specifications are subject to change without notice

Interior RS with sport seats plus in leather, black, red accents and Dinamica microfibre, deep black, elements	**PWP**	**$4,000**
Includes:		
> Seats in leather, perforated with honeycomb pattern	N1H	•
> RS emblems with steering wheel rim in Dinamica microfibre, deep black and red 12 o'clock marker in leather	6F8	○
> Upper interior elements with contrasting stitching and lower interior elements in Dinamica microfibre with contrasting stitching	7HC	○

Wheel options		**Code**	**Price**
6-twin-spoke, Black metallic with graphic print, gloss turned finish, darkened, 10.0|10.5Jx21, 285/30 R21 tyres* ** Only in conjunction with Audi sport package (PEG)*		CW8	$2,000
6-twin-spoke, Black metallic, 10.0|10.5Jx21, 285/30 R21 tyres		C9R	$1,500
6-twin-spoke, Matt neodymium gold, 10.0|10.5Jx21, 285/30 R21 tyres		C9V	$1,500

• Standard equipment | ○ Available as an option | - not available
All prices and specifications are subject to change without notice